Tubular
Heat Exchangers

Heat Transfer Technology from Bowman



BOWMAN®

100 YEARS OF HEAT TRANSFER TECHNOLOGY

Staying cool under pressure

Bowman Tubular Heat Exchangers

For cooling marine and stationary land based engines

Bowman tubular heat exchangers are designed for cooling engines in applications where air cooling is either unavailable or inappropriate.

For over 50 years, they have been used to cool engine jacket water in applications as diverse as marine propulsion, power generation systems, automotive engine testing and emergency fire protection systems.

Efficient cooling is vital to the performance of an engine and by installing Bowman heat exchangers, the correct operating temperature can be maintained.

Bowman tubular heat exchangers also offer a more compact cooling solution to traditional air blast radiators, aiding engine packaging when space is at a premium.



Fully floating tubestack
The 'fully floating' design allows for expansion and contraction of the tubestack within the cast body of the heat exchanger, minimising thermal stress, enhancing reliability and longevity.

Simple to maintain
The removable end covers enable the tubestack to be easily withdrawn making cleaning and routine maintenance simple.

Marine and land based versions
Whether the cooling medium is salt water, fresh water, or mineral rich/contaminated water, Bowman has the most comprehensive range of heat exchangers to suit any marine or land based application.

Titanium tube stacks
Titanium is the ultimate 'fit and forget' material for applications where aggressive water conditions exist. Bowman also offer titanium tube stacks as an option on many of our tubular heat exchangers.

Remote header tank
Bowman tubular heat exchangers are intended to be used with a separate header tank (not supplied), which can be positioned remotely from the unit in the most convenient location.

Easy product selection
At Bowman, we have developed a computer programme to select the correct heat exchanger for your application. Simply by supplying us with the following information we can advise the correct unit for your requirements;

1: Heat to be dissipated in kW
2: Engine coolant flow in l/min
3: Max. engine coolant temperature in °C
4: Raw water temperature in °C
5: Type of raw water to be used (sea, fresh or contaminated)

This table is intended to provide a general guide to the typical performance of Bowman marine tubular heat exchangers, for engine jacket water cooling and installed in conjunction with a separate header tank.

Marine Tubular Heat Exchangers

Type	Typical Engine Suitability	Max Raw Water Flow	Raw Water Volume	Engine Coolant Volume	Equivalent Header Tank Heat Exchanger
	kW	litre/min	litre	litre	
EC80-4276-1	20	54	0.31	0.26	-
EC100-4276-2	40	54	0.44	0.49	EH100-3401-2
EC120-4276-3	52	54	0.57	0.74	EH200-3401-3
FC100-3891-2	82	95	0.84	1.10	FH100-3182-2
FC120-3891-3	115	95	1.06	1.50	FH200-3182-2
FG100-3910-2	150	125	1.56	2.40	FH300-3282-2
FG120-3910-3	200	125	1.96	3.00	FH400-3282-3
GL140-3167-2	240	225	3.10	3.60	GH200-3482-2
GL180-3167-3	320	225	3.80	4.80	GH300-3482-3
GL240-3167-4	400	225	4.60	6.30	GH400-3482-4
GK190-3168-3	450	325	6.30	7.00	KH200-3071-3
GK250-3168-4	600	325	7.50	9.00	KH300-3071-4
GK320-3168-5	750	325	9.00	11.60	KH400-3071-5
JK190-3932-3	620	460	8.80	9.70	JH200-3335-3
JK250-3932-4	820	460	10.40	12.50	JH300-3335-4
JK320-3932-5	1000	460	12.50	16.10	JH400-3335-5
PK250-3170-4	1200	700	16.00	13.60	PH200-3073-4
PK320-3170-5	1500	700	21.80	22.60	PH300-3073-5
PK400-3170-6	1800	700	25.30	28.50	PH400-3073-6
RK400-5883-6	2500	1000	37.90	43.40	-

Land Based Tubular Heat Exchangers

Type	Typical Engine Suitability	Max Raw Water Flow	Raw Water Volume	Engine Coolant Volume	Equivalent Header Tank Heat Exchanger
	kW	litre/min	litre	litre	
EC80-1435-1	20	54	0.31	0.26	-
EC100-1435-2	40	54	0.44	0.49	EH100-4065-2
EC120-1435-3	52	54	0.57	0.74	EH200-4065-3
FC100-1436-2	82	95	0.84	1.10	FH100-4066-2
FC120-1436-3	115	95	1.06	1.50	FH200-4066-2
FG100-3909-2	150	125	1.56	2.40	FH300-4067-2
FG120-3909-3	200	125	1.96	3.00	FH400-4067-3
GL140-3718-2	240	225	3.10	3.60	GH200-4068-2
GL180-3718-3	320	225	3.80	4.80	GH300-4068-3
GL240-3718-4	400	225	4.60	6.30	GH400-4068-4
GK190-3487-3	450	325	6.30	7.00	KH200-4069-3
GK250-3487-4	600	325	7.50	9.00	KH300-4069-4
GK320-3487-5	750	325	9.00	11.60	KH400-4069-5
JK190-3931-3	620	460	8.80	9.70	JH200-4070-3
JK250-3931-4	820	460	10.40	12.50	JH300-4070-4
JK320-3931-5	1000	460	12.50	16.10	JH400-4070-5
PK250-1670-4	1200	700	16.00	13.60	PH200-4071-4
PK320-1670-5	1500	700	21.80	22.60	PH300-4071-5
PK400-1670-6	1800	700	25.30	28.50	PH400-4071-6
RK400-5883-6	2500	1000	37.90	43.40	-

EC Range

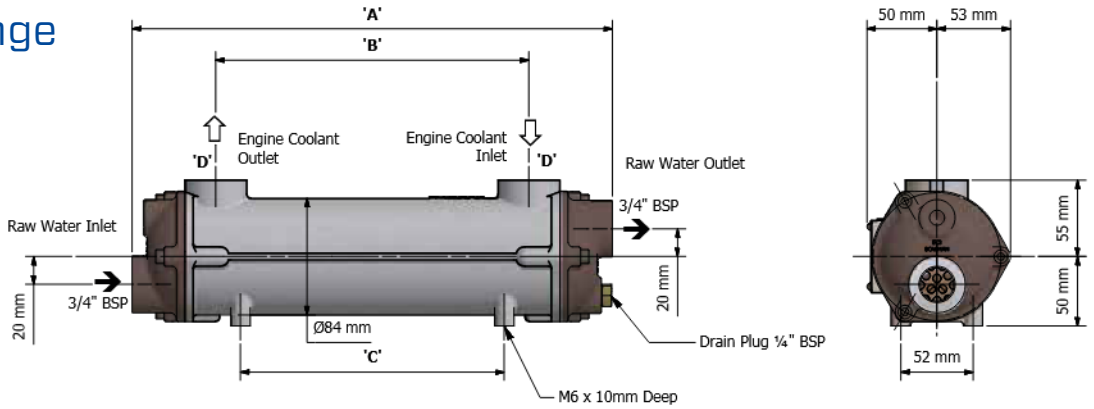

Type	Weight	A	B	C	D
	kg	mm	mm	mm	BSP
EC80	2.4	174	60	60	3/4"
EC100	3.2	260	140	104	1"
EC120	3.8	346	226	190	1"

FC Range

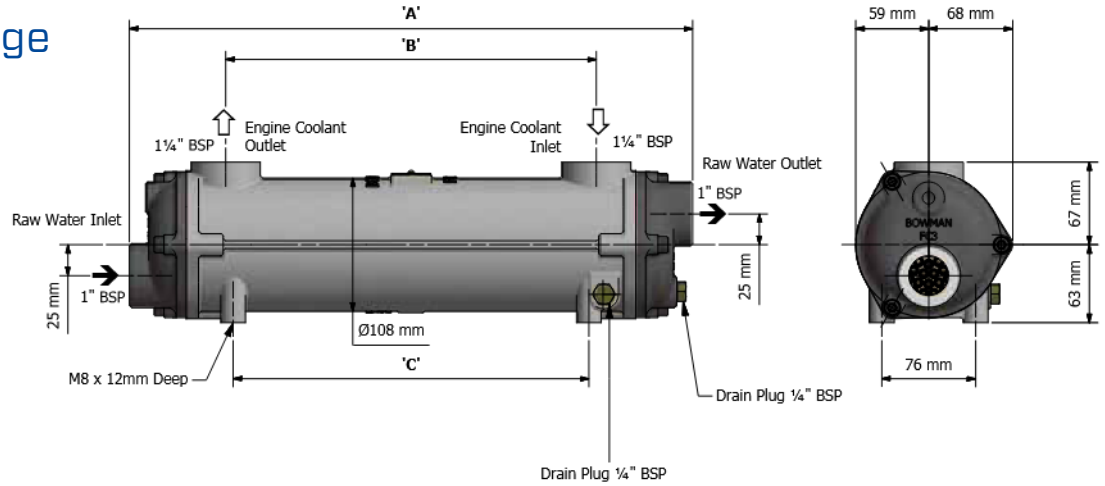

Type	Weight	A	B	C
	kg	mm	mm	mm
FC100	6.3	358	202	190
FC120	7.3	456	300	288

FG Range

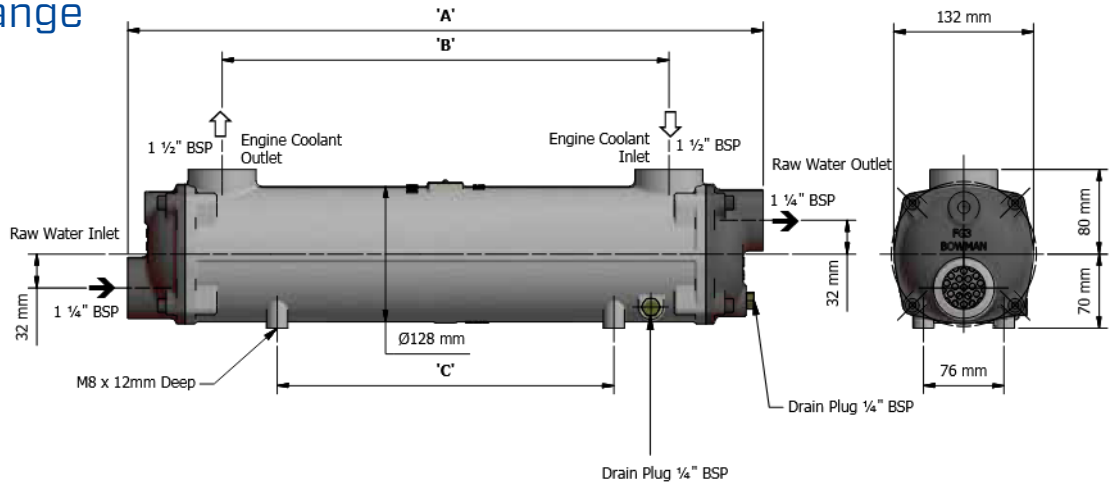

Type	Weight	A	B	C
	kg	mm	mm	mm
FG100	10	472	294	190
FG120	12	600	422	318

Maximum working pressure 16 bar.
Maximum working temperature 110°C.

GL Range

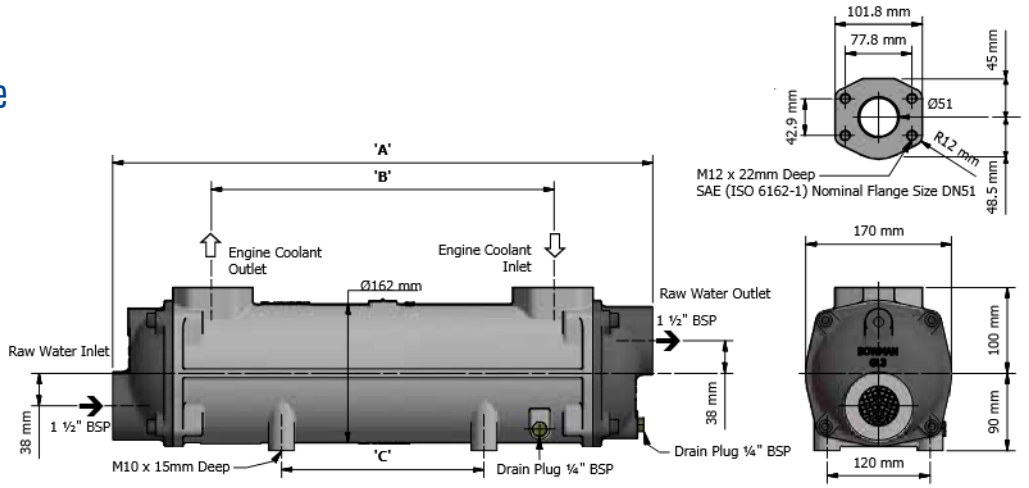

Type	Weight	A	B	C
	kg	mm	mm	mm
GL140	18	502	272	108
GL180	21	630	400	236
GL240	25	776	546	382

GK Range

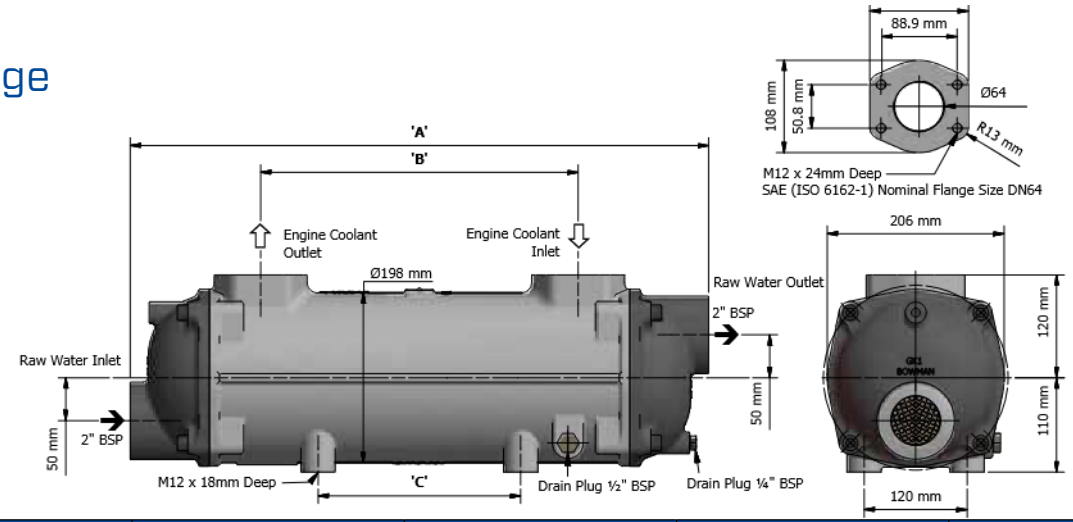

Type	Weight	A	B	C
	kg	mm	mm	mm
GK190	34	674	370	236
GK250	39	820	516	382
GK320	46	998	694	560

JK Range

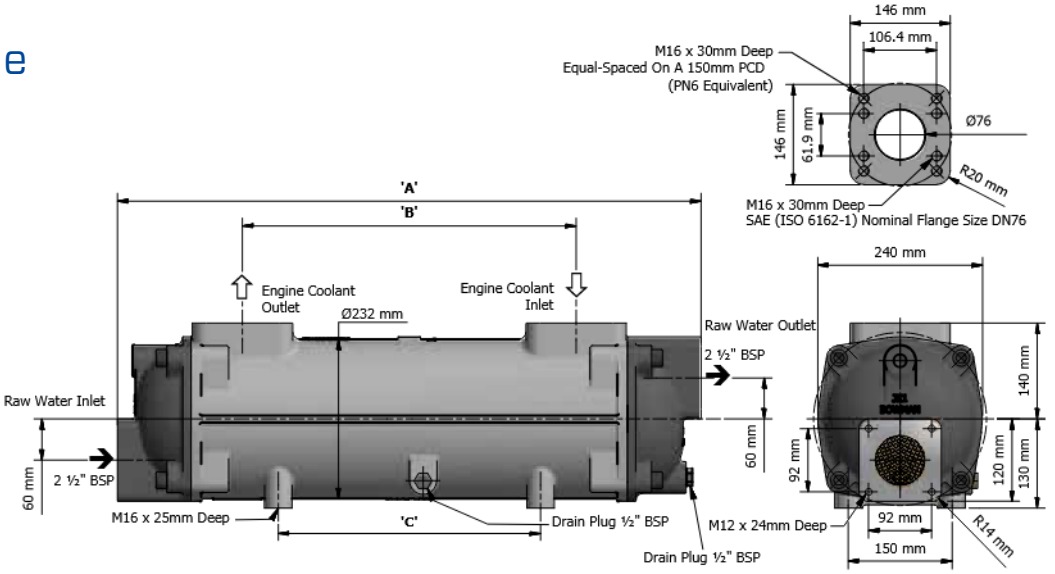

Type	Weight	A	B	C
	kg	mm	mm	mm
JK190	58	704	340	236
JK250	66	850	486	382
JK320	78	1028	664	560

Maximum working pressure 16 bar.
Maximum working temperature 110°C.

PK Range

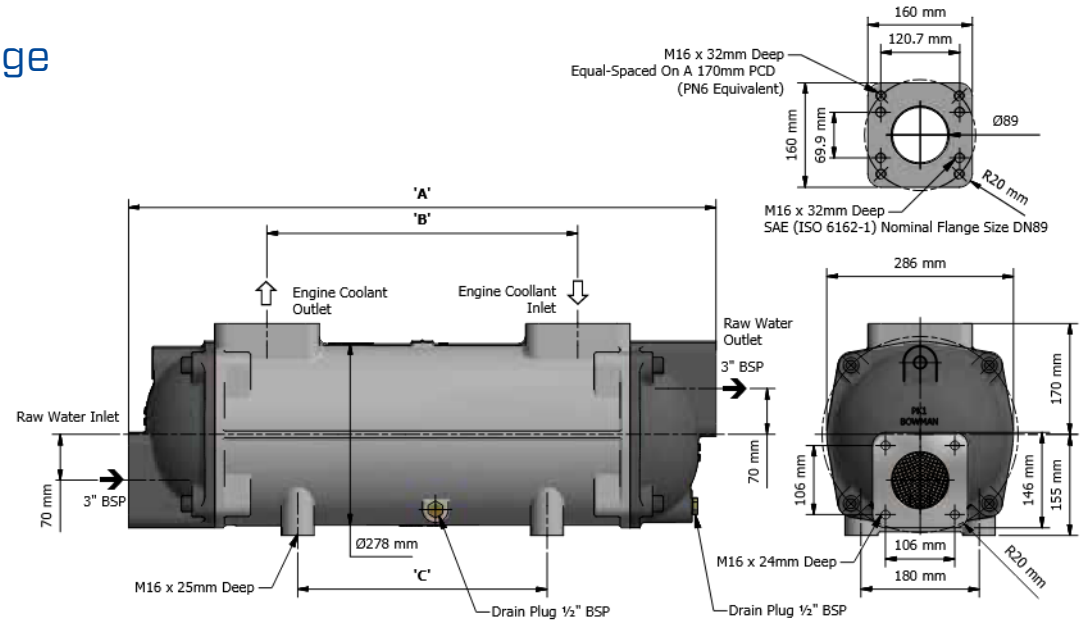

Type	Weight	A	B	C
	kg	mm	mm	mm
PK250	94	900	476	382
PK320	110	1078	654	560
PK400	125	1280	856	762

RK Range

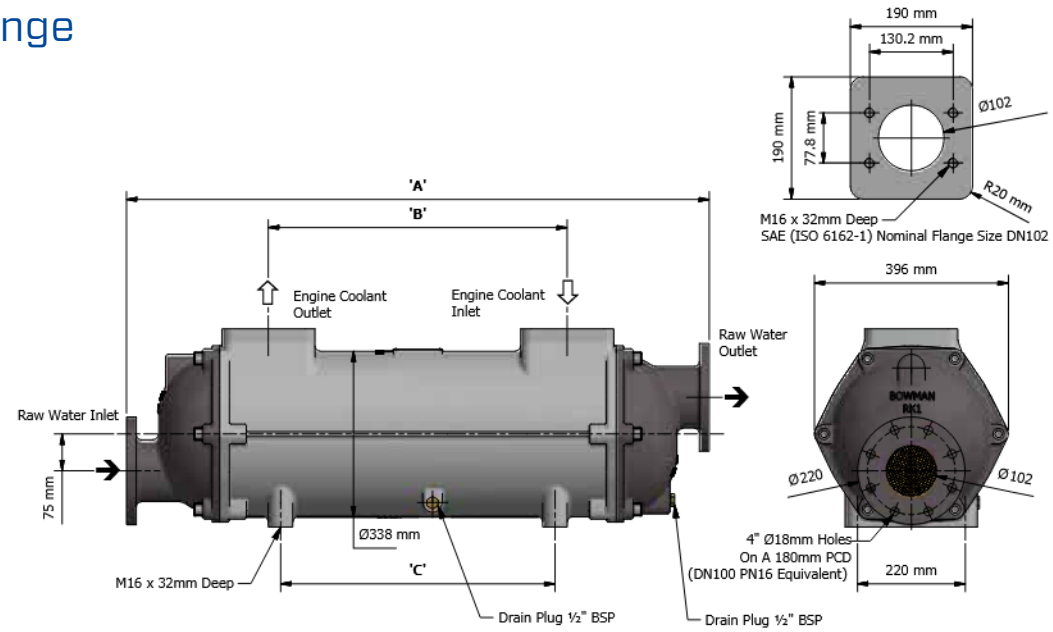

Type	Weight	A	B	C
	kg	mm	mm	mm
RK400	186	1392	812	762

Maximum working pressure 16 bar.
Maximum working temperature 110°C.

Installing the Heat Exchanger

The heat exchanger should be installed horizontally, with the engine coolant connections on top and the raw water outlet uppermost and piped up as shown below, to ensure the elimination of any entrained air.

The header tank volume should be at least 17% of the total volume and have a pressure cap of at least 50 kPa.

Bowman recommend using an ethylene glycol solution for the engine cooling circuit in the concentration advised by the engine manufacturer for the operating conditions. Should you intend using an alternative coolant, please contact our sales team.

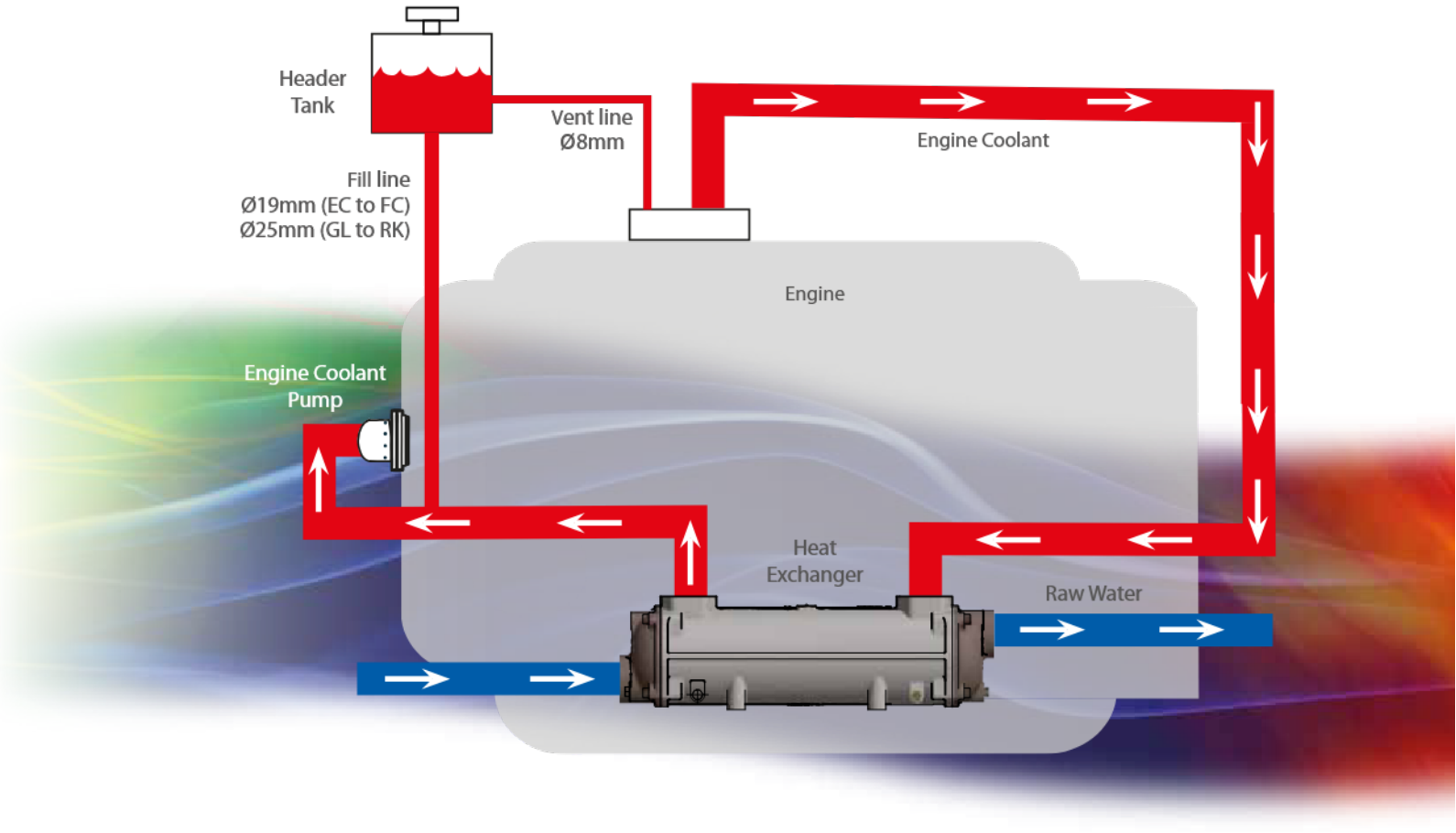

Replacement Parts

A comprehensive range of replacement parts is available for all Bowman heat exchangers. This includes end covers, "O" seals, tube stacks, bodies and end cover fixings.

Servicing the Unit

By simply unscrewing the end cover retaining screws, the tubestack can be removed from its outer 'shell' for routine cleaning and maintenance. On reassembly, it is recommended that the "O" rings are renewed to ensure a reliable, water tight seal.

Titanium Tube Stacks

Bowman now offer titanium tube stacks as an option for many of our tubular heat exchangers, providing a 'fit and forget' solution for the most demanding applications and benefiting from a 10 year guarantee on all titanium material in contact with cooling water. Contact our technical sales team for more details.

Total Engine Cooling Solutions

Bowman can provide a complete solution for cooling both marine and land based stationary engines, including:

Charge Air Coolers (Intercoolers)

Suitable for engines rated from 50kW to 1200kW



Engine & Gearbox Oil Coolers

Suitable for engines rated from 80kW to 8900kW



Header Tank Heat Exchangers

Suitable for engines rated from 40kW to 1800kW



Fuel Coolers

Suitable for engines rated up to 180kW



A world of applications

Bowman heat exchangers can be found cooling engines in some of the most extreme conditions in the world. From the searing heat of an Australian summer to the chilling depths of an Arctic winter, plus just about everything in between.

Irrigation Sys tems



Cooling the engine jacket water for irrigation pump sets to ensure the pumps engines run reliably despite high ambient air temperatures.

Marine Engineering



From sport boats and yachts, to commercial vessels, Bowman heat exchangers have been providing marine cooling solutions for over 50 years.

Engine Testing

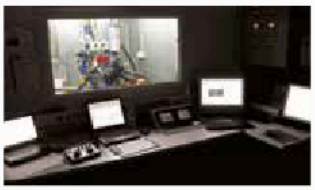

Bowman heat exchangers are used extensively to control engine temperatures during hot and cold testing for both OEM's and R&D organisations.

Fire Protection Sys tems



Many 'mission critical' fire protection systems rely on Bowman heat exchangers to cool engine pumps in the event of an emergency.



Bowman is now established as the 'leading brand' for tubular heat exchangers. With tens of thousands of units operating reliably and efficiently throughout the world, you can have complete confidence when you specify Bowman tubular heat exchangers.

LUXFORDS

MARINE I INDUSTRIAL I SOLUTIONS

Bowman distributor for Australia & New Zealand

Luxfords Marine Industrial Solutions
2/19 Bennetts Road, Mornington VIC 3931

+61 3 5973 6444
(03) 5973 6444 within Australia

sales@luxfords.com.au
www.luxfords.com.au/bowman